Analog-1.1.27

INDHIRESH S-EE25BTECH11027

March 26, 2026

Question

Consider the op-amp circuit shown.

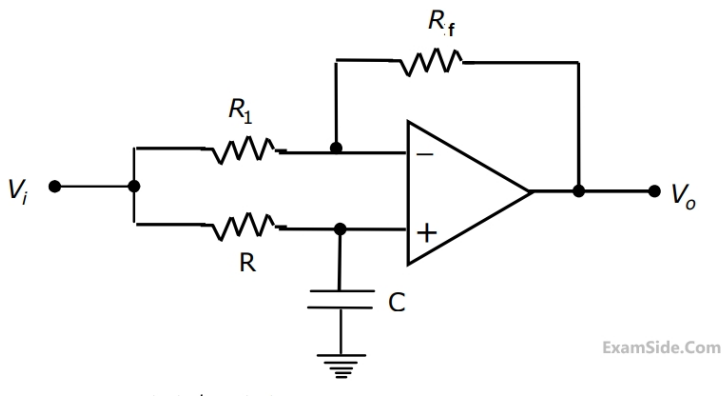

Figure: Op-amp circuit

1. The transfer function Vo(s)/Vi(s) is:

1) $\frac{1-sRC}{1+sRC}$ 2) $\frac{1+sRC}{1-sRC}$ 3) $\frac{1}{1-sRC}$ 4) $\frac{1}{1+sRC}$

2. If Vi = Vi sin(ωt) and Vo = Vo sin(ωt + ϕ), the minimum and maximum values of ϕ (in radians) are respectively:

1)-$\frac{\pi}{2}$ and $\frac{\pi}{2}$ 2)0 and $\frac{\pi}{2}$ 3) -π and 0 4)-$\frac{\pi}{2}$ and 0

Equivalent Circuit in s-domain

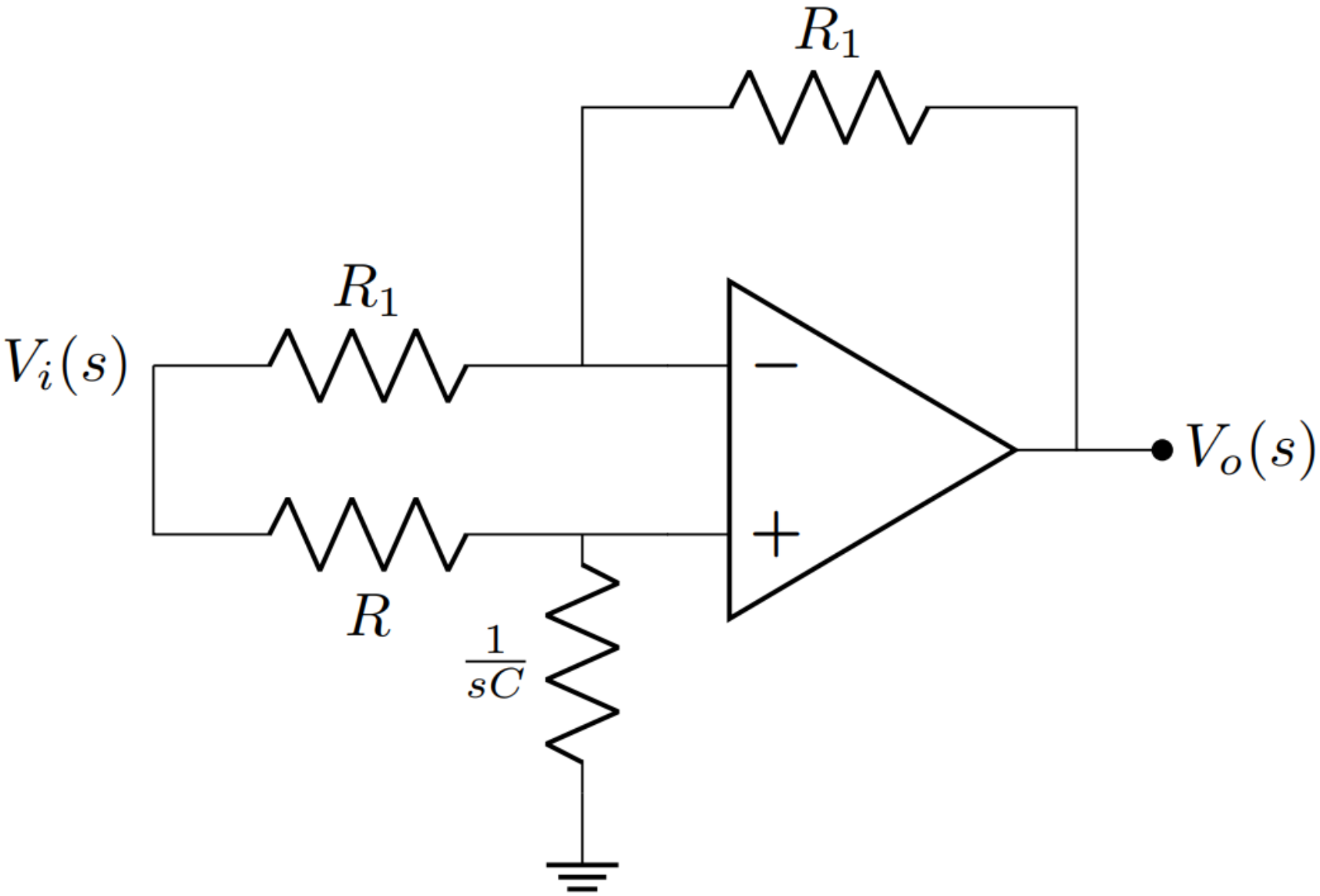

Analysis of the Non-Inverting Terminal

The input $v_i(t)$ is applied to the RC network connected to the non-inverting terminal (v_+).

Applying KCL at node v_+:

$$\frac{v_i(t) - v_+(t)}{R} = C\frac{dv_+(t)}{dt}$$

Rearranging to form a standard RC differential equation:

$$v_i(t) = RC\frac{dv_+(t)}{dt} + v_+(t) \tag{1}$$

Analysis of the Inverting Terminal

For an ideal op-amp, $v_- = v_+$. Applying KCL at the inverting terminal:

$$\frac{v_i(t) - v_+(t)}{R_1} + \frac{v_o(t) - v_+(t)}{R_1} = 0$$

Since the R_1 resistors are equal, they cancel out:

$$v_i(t) - v_+(t) + v_o(t) - v_+(t) = 0$$

Solving for $v_+(t)$:

$$v_+(t) = \frac{v_o(t) + v_i(t)}{2} \tag{2}$$

Combining the Results

Substitute Equation (2) into Equation (1):

$$v_i(t) = RC\frac{d}{dt}\left[\frac{v_o(t) + v_i(t)}{2}\right] + \frac{v_o(t) + v_i(t)}{2}$$

Multiply the entire equation by 2 to clear the fraction:

$$2v_i(t) = RC\frac{dv_o(t)}{dt} + RC\frac{dv_i(t)}{dt} + v_o(t) + v_i(t)$$

Group the input and output terms:

$$RC\frac{dv_o(t)}{dt} + v_o(t) = v_i(t) - RC\frac{dv_i(t)}{dt}$$

Final Differential Equation

The time-domain behavior of the first-order all-pass filter is governed by:

Final Result

$$RC\frac{dv_o(t)}{dt} + v_o(t) = v_i(t) - RC\frac{dv_i(t)}{dt}$$

Method 2: The Transform Domain Approach

If we already know the Transfer Function $H(s)$, we can derive the differential equation through the Inverse Laplace Transform.

The Transfer Function for this all-pass filter is:

$$H(s) = \frac{V_o(s)}{V_i(s)} = \frac{1 - sRC}{1 + sRC}$$

Cross-multiplying the terms gives:

$$V_o(s)(1 + sRC) = V_i(s)(1 - sRC)$$

Expanding both sides:

$$V_o(s) + sRCV_o(s) = V_i(s) - sRCV_i(s)$$

Applying Inverse Laplace Transform

Using the Laplace Transform property for differentiation:

$$\mathcal{L}\left\{\frac{dx(t)}{dt}\right\} = sX(s) - x(0^-)$$

Assuming zero initial conditions ($v_o(0) = 0$ and $v_i(0) = 0$), we apply the Inverse Transform $\mathcal{L}^{-1}$ to each term:

$$\mathcal{L}^{-1}\{V_o(s)\} + RC\mathcal{L}^{-1}\{sV_o(s)\} = \mathcal{L}^{-1}\{V_i(s)\} - RC\mathcal{L}^{-1}\{sV_i(s)\}$$

This directly yields the time-domain differential equation:

Differential Equation Representation

$$v_o(t) + RC\frac{dv_o(t)}{dt} = v_i(t) - RC\frac{dv_i(t)}{dt}$$

Finding h(t)-Method 1:The System Model

The first-order all-pass filter is governed by the differential equation:

$$RC\frac{dv_o(t)}{dt} + v_o(t) = v_i(t) - RC\frac{dv_i(t)}{dt}$$

To find the **Impulse Response** $h(t)$, we set the input $v_i(t) = \delta(t)$:

$$RC\frac{dh(t)}{dt} + h(t) = \delta(t) - RC\delta'(t) \tag{3}$$

where $\delta'(t)$ is the unit doublet (derivative of the delta function).

Integrating Factor Approach

Divide Eq. (3) by RC to get standard form:

$$\frac{dh(t)}{dt} + \frac{1}{RC}h(t) = \frac{1}{RC}\delta(t) - \delta'(t)$$

Multiply by the integrating factor $\mu(t) = e^{t/RC}$:

$$\frac{d}{dt}\left[e^{t/RC}h(t)\right] = e^{t/RC}\left(\frac{1}{RC}\delta(t) - \delta'(t)\right)$$

Integrating from 0^- to t:

$$e^{t/RC}h(t) = \int_{0^-}^{t} \frac{1}{RC}e^{\tau/RC}\delta(\tau)d\tau - \int_{0^-}^{t} e^{\tau/RC}\delta'(\tau)d\tau$$

Evaluating the Integrals

1. First Integral (Sifting Property):

$$\int_{0^-}^{t} \frac{1}{RC} e^{\tau/RC} \delta(\tau) d\tau = \frac{1}{RC} e^0 u(t) = \frac{1}{RC} u(t)$$

2. Second Integral (Doublet Property): Using $\int f(t)\delta'(t)dt = f(t)\delta(t) - \int f'(t)\delta(t)dt$:

$$\int_{0^-}^{t} e^{\tau/RC} \delta'(\tau) d\tau = [e^0 \delta(t)] - \int \frac{1}{RC} e^{\tau/RC} \delta(\tau) d\tau = \delta(t) - \frac{1}{RC} u(t)$$

Combining:

$$e^{t/RC} h(t) = \frac{1}{RC} u(t) - \left(\delta(t) - \frac{1}{RC} u(t) \right) = \frac{2}{RC} u(t) - \delta(t)$$

Final Expression

Multiplying through by $e^{-t/RC}$:

Impulse Response $h(t)$

$$h(t) = -\delta(t) + \frac{2}{RC} e^{-\frac{t}{RC}} u(t)$$

Method 2: Inverse Laplace Transform

We know that the transfer function is

$$H(s) = \frac{1 - sRC}{1 + sRC}$$

We manipulate $H(s)$ to fit standard Laplace Table forms:

$$H(s) = \frac{-(sRC + 1) + 2}{sRC + 1} = -1 + \frac{2}{sRC + 1}$$

Factor out RC from the denominator:

$$H(s) = -1 + \left(\frac{2}{RC}\right) \frac{1}{s + \frac{1}{RC}}$$

Apply $\mathcal{L}^{-1}$:

$$h(t) = \mathcal{L}^{-1}\{-1\} + \frac{2}{RC}\mathcal{L}^{-1}\left\{\frac{1}{s + \frac{1}{RC}}\right\}$$

Final Verification

Using the standard transform pairs:

- $\mathcal{L}^{-1}\{1\} = \delta(t)$
- $\mathcal{L}^{-1}\{\frac{1}{s+a}\} = e^{-at}u(t)$

Result Consistency

$$h(t) = -\delta(t) + \frac{2}{RC}e^{-\frac{t}{RC}}u(t)$$

Both methods yield the same expression, confirming the mathematical model of the all-pass filter.

Min and max phase-Formulating the State Equation

To apply RK4, we must rewrite our differential equation in the form $\frac{dv_o}{dt} = f(t, v_o)$.

Starting from:

$$v_o(t) + RC\frac{dv_o(t)}{dt} = v_i(t) - RC\frac{dv_i(t)}{dt}$$

Substitute $V_i = V_i \sin(\omega t)$

$$RC\frac{dv_o(t)}{dt} + v_o(t) = V_i \sin(\omega t) - \omega RCV_i \cos(\omega t)$$

Rearranging to isolate the derivative:

The Slope Function $f(t, v_o)$

$$\frac{dv_o}{dt} = \frac{1}{RC}\left[V_i \sin(\omega t) - \omega RCV_i \cos(\omega t) - v_o(t)\right]$$

The RK4 Iterative Process

For a small time-step h, the output v_{n+1} is calculated using four "trial" slopes:

- $k_1 = f(t_n, v_n)$
- $k_2 = f(t_n + \frac{h}{2}, v_n + \frac{h}{2}k_1)$
- $k_3 = f(t_n + \frac{h}{2}, v_n + \frac{h}{2}k_2)$
- $k_4 = f(t_n + h, v_n + hk_3)$

The Weighted Average:

$$v_{n+1} = v_n + \frac{h}{6}(k_1 + 2k_2 + 2k_3 + k_4)$$

This sequence "marches" the output voltage forward in time with high stability.

Numerical Proof for Option (iii)

By running the RK4 simulation at extreme frequencies, we confirm:

- **At 1 Hz:** The output $v_o(t)$ and input $v_i(t)$ are nearly identical (Phase ≈ 0).
- **At 10 kHz:** The output is inverted relative to the input (Phase $\approx -\pi$).

Final Verification

The numerical "Time-Delay" method confirms that the phase ϕ is bounded between $-\pi$ and 0.

Python code for plot-RK4

```
import numpy as np
import matplotlib.pyplot as plt

# Parameters
R, C = 1000, 1e-6
RC = R * C
Vi = 5

def f(t, vo, omega):
    return (Vi * (np.sin(omega * t) - omega * RC
        * np.cos(omega * t)) - vo) / RC

def run_rk4(freq, duration, h):
    t = np.arange(0, duration, h)
    omega = 2 * np.pi * freq
    vo = np.zeros(len(t))
```

Python code for plot-RK4

```
    for i in range(len(t) - 1):
        k1 = f(t[i], vo[i], omega)
        k2 = f(t[i] + h/2, vo[i] + h/2 * k1,
            omega)
        k3 = f(t[i] + h/2, vo[i] + h/2 * k2,
            omega)
        k4 = f(t[i] + h, vo[i] + h * k3, omega)
        vo[i+1] = vo[i] + (h/6) * (k1 + 2*k2 + 2*
            k3 + k4)
    return t, Vi * np.sin(omega * t), vo

def calculate_phase_fft(vi, vo):
    """Calculates phase difference using FFT at
        the dominant frequency."""
```

Python code for plot-RK4

```
# Perform FFT
    Vi_fft = np.fft.fft(vi)
    Vo_fft = np.fft.fft(vo)

    # Find the peak frequency index (the
        fundamental frequency)
    idx = np.argmax(np.abs(Vi_fft))

    # Get the phase angles in radians
    phase_vi = np.angle(Vi_fft[idx])
    phase_vo = np.angle(Vo_fft[idx])

    # Phase difference (Output - Input)
    diff = phase_vo - phase_vi
    diff = (diff + np.pi) % (2 * np.pi) - np.pi
```

Python code for plot-RK4

```
    if diff > 0: diff -= 2*np.pi

    return diff, np.degrees(diff)

# 1. Low Frequency (1 Hz)
t_low, vi_low, vo_low = run_rk4(1, 5.0, 1e-3)
phi_rad_low, phi_deg_low = calculate_phase_fft(
    vi_low, vo_low)

# 2. High Frequency (10 kHz)
t_high, vi_high, vo_high = run_rk4(10000, 0.002,
    1e-7)
phi_rad_high, phi_deg_high = calculate_phase_fft(
    vi_high, vo_high)
```

Python code for plot-RK4

```
# Plotting
fig, (ax1, ax2) = plt.subplots(1, 2, figsize=(15,
    6))

# Subplot 1: Low Frequency
ax1.plot(t_low, vi_low, 'r--', label='Input $v_i(
    t)$')
ax1.plot(t_low, vo_low, 'b', label='Output $v_o(t
    )$')
ax1.set_title(f'Low Frequency (1 Hz)\nCalc Phase:
    {phi_deg_low:.2f}  ')
ax1.set_xlim(4.0, 5.0)
ax1.set_xlabel('Time (s)')
ax1.set_ylabel('Voltage (V)')
ax1.grid(True, linestyle=':')
ax1.legend()
```

Python code for plot-RK4

```
# Subplot 2: High Frequency
ax2.plot(t_high, vi_high, 'r--', label='Input
    $v_i(t)$')
ax2.plot(t_high, vo_high, 'b', label='Output $v_o
    (t)$')
ax2.set_title(f'High Frequency (10 kHz)\nCalc
    Phase: {phi_deg_high:.2f}  ')
ax2.set_xlim(0.0018, 0.002)
ax2.set_xlabel('Time (s)')
ax2.set_ylabel('Voltage (V)')
ax2.grid(True, linestyle=':')
ax2.legend()
plt.tight_layout()
plt.show()
print(f"Results:\n1 Hz Phase: {phi_deg_low:.4f}
    degrees\n10 kHz Phase: {phi_deg_high:.4f}
    degrees")
```

Plotn showing phase difference

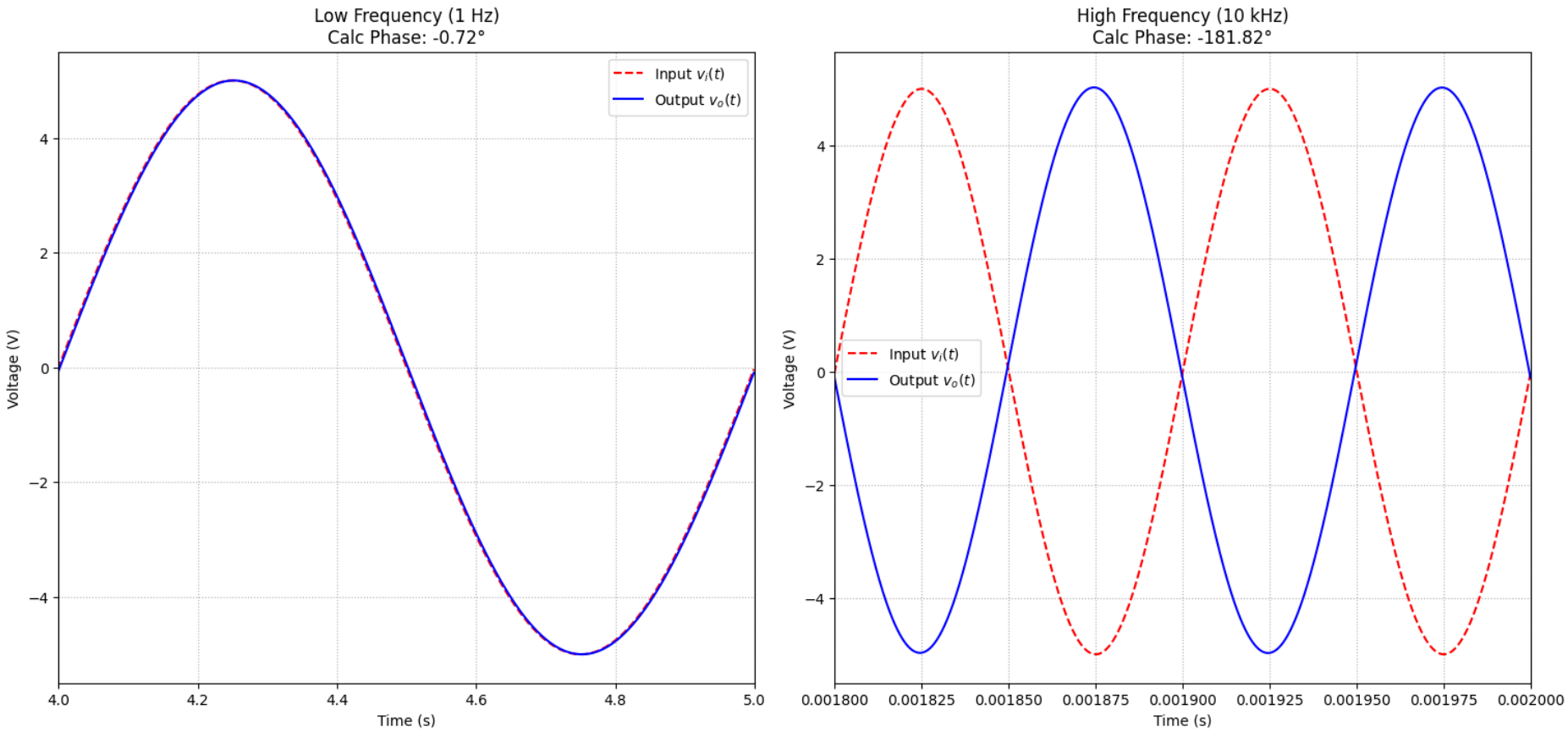

Figure: Plot

Python Code for Plot

```
import numpy as np
import matplotlib.pyplot as plt

R = 1000
C = 1e-6
RC = R * C

# 1. Create the time vector
t = np.linspace(-0.001, 0.005, 1000)
dt = t[1] - t[0] # Time step size

# 2. Define the Step Function u(t)
u = np.where(t >= 0, 1, 0)

# 3. Define the Continuous Exponential Part

h_continuous = (2/RC) * np.exp(-t/RC) * u
```

Python Code for Plot

```
# 4. Define the Delta Function numerically
delta = np.zeros_like(t)
delta[np.abs(t).argmin()] = 1/dt

# 5. Combine into the final h(t)
h_final = -delta + h_continuous

# Plotting
plt.figure(figsize=(9, 6))
plt.plot(t, h_final, label=' $h(t)$ Calculation',
    color='blue', lw=2)

# Aesthetics
plt.axhline(0, color='black', lw=1)
plt.axvline(0, color='black', lw=1)
```

Python Code for Plot

```
plt.ylim(-1000, 2500) # Zoom in to see the
    behavior clearly
plt.title(r' Time-Domain Plot of $h(t) = -\delta(
    t) + \frac{2}{RC}e^{-t/RC}u(t)$')
plt.xlabel('Time (s)')
plt.ylabel('Amplitude')
plt.grid(True, linestyle=':', alpha=0.6)
plt.legend()
plt.show()
```

Python plot

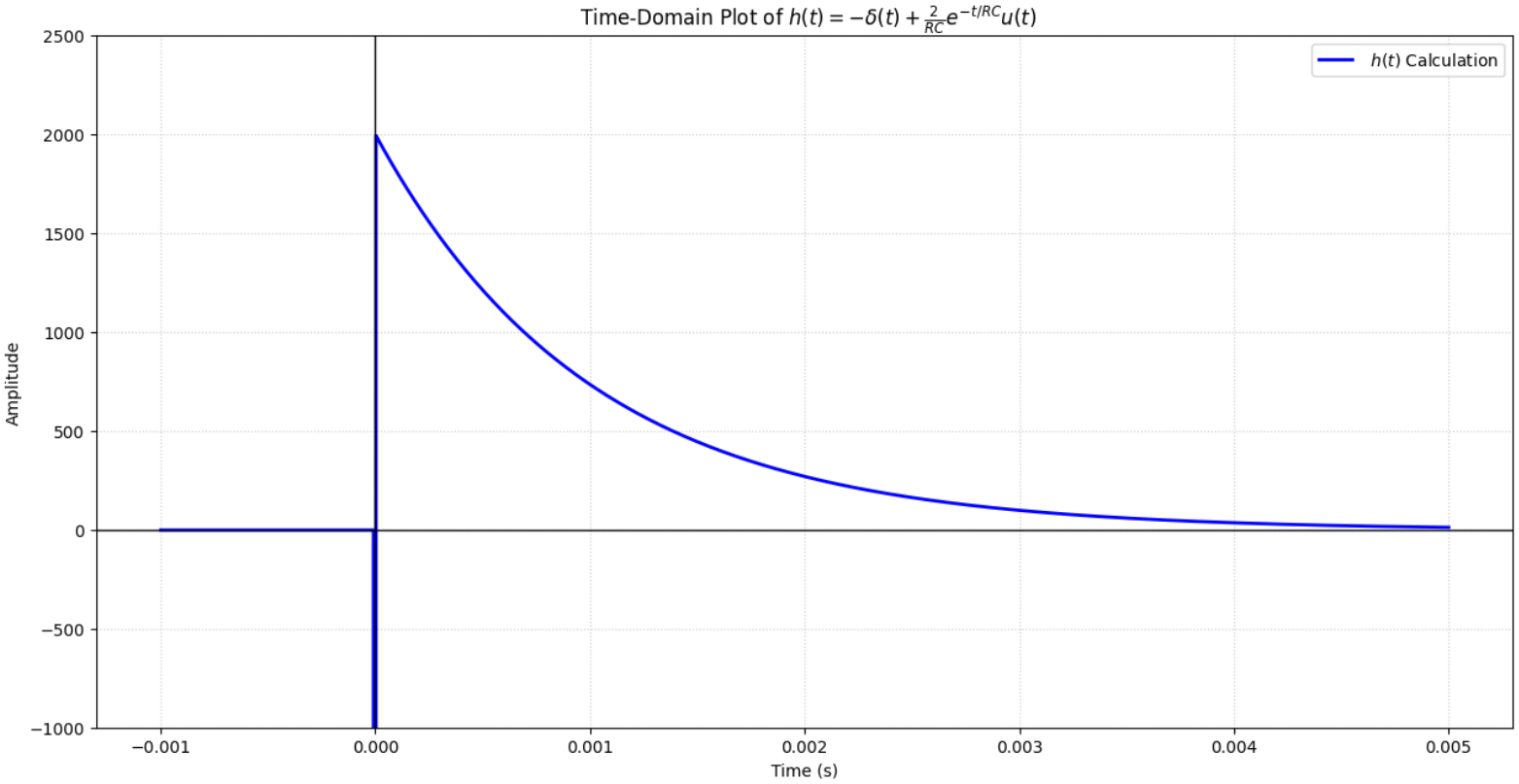

Figure: Plot